HWCI 3.3.1.3
TDRSS Pointed Antenna

- Requirements Traceability
  - DTRD Section 3.3.1.1:Global Downlink
- Trade Studies
  - 6 Companies have responded to a Market Survey

CO.	WEIGHT	POWER	COST
EMP.	30 lbs.	150w	97k
SEATEL	23 lbs.	45w	??
Malibu Research	20 lbs.	40w	25k
KVH	50 lbs.	69w	4.5k
TECOM	40 lbs.	??	15k
Datron	22 lbs.	84w	20k
ACE. Project	??	??	??
WFF	41 lbs	31.59W	5K

Brian Corbin
Code 567
November 4-5, 1998

HWCI 3.3.1.3
TDRSS Pointed Antenna

- Functional and Performance Requirements
  - 3.3.1.3.a - The System shall transmit an Receive ULDB data
  - 3.3.1.3.b - The System shall transmit a maximum of 150 KBPS with a Min. of 3dB Margin
  - 3.3.1.3.c - The item shall point to the optimum satellite using GPS Positional Data
  - 3.3.1.3.d - Slew Rate 9deg/sec
  - 3.3.1.3.e - Accuracy +/-5deg
  - 3.3.1.3.f &.g- 360deg Azimuth Pointing, -6 to +90deg Elevation
  - 3.3.1.3.h - The item shall operate in the flight environment (-40 to +70C)

HWCI 3.3.1.3
TDRSS Pointed Antenna

- CLASS Analysis at GSFC

Effective Bit Rate	MODE C=Combined NC=Not Combined	MARGIN
50KB	MA 50KB C.	5.15DB
100KB	MA 50KB NC.	2.15DB
150KB	MA 150KB C.	-0.14DB
300KB	MA 150KB NC.	-3.14DB
50KB	SSA 50KB C	13.75DB
100KB	SSA 50KB NC.	10.75DB
150KB	SSA 150KB C.	7.87DB
300KB	SSA 150KB NC.	4.87DB

HWCI 3.3.1.3
TDRSS Pointed Antenna

- HWCI Description
  - Physical
    - Electronics 12”L x 10”W x 15” H 2.5lbs.
    - Mount 33”L x 43”W x 45”H 32.5lbs
  - Electrical
    - 28V @ 1Amp (28Watts) power and data interfaces
  - Interfaces
    - GPS RS-232 Positional Data
    - Pulse Duration Modulation for Motor Control
  - Antenna
    - 18” LHC Patch Array
    - 18dB Gain
    - HPBW 18.5 deg

HWCI 3.3.1
TDRSS Pointed Antenna

- Risk Assessment & Mitigation/Reliability
  - Controller
    - Has Previous Flight History
    - Hybrid Design COTS/WFF
  - Mount
    - Has previous Flight History (Navajo TDRSS Satcom SYS.)
    - Hybrid Motor Design COTS/WFF
  - Antenna
    - Has Previous Flight History (Same as Mount)

HWCI 3.3.1
TDRSS Pointed Antenna

ULDB
PDR

3.3
Telemetry

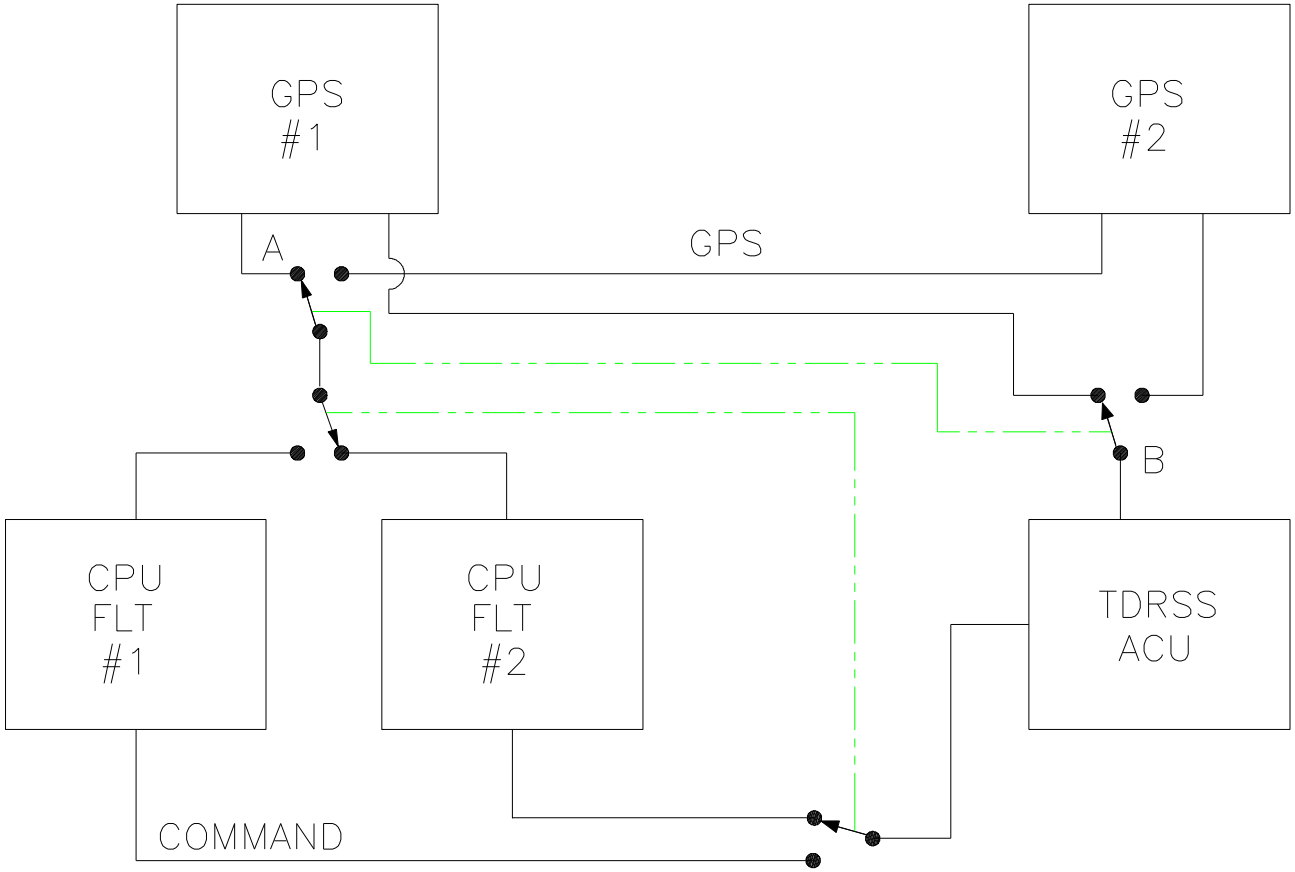

Brian Corbin
Code 567
November 4-5, 1998

HWCI 3.3.1.4
TDRSS RF Switch

- Functional and Performance Requirements
  - 3.3.1.4 Break Before Make Failsafe S-Band Coaxial Switch
- HWCI Description
  - Physical
    - 2”L x 1.5”W x 0.5”H
  - Electrical
    - 10E6 Cycles
    - 10m ohms Contact Resistant
    - Power
      - 28V@ .120A
    - RF
      - VSWR 1.5:1 Max
      - Isolation 60dB Min.
      - Insertion Loss .5dB Max.

Brian Corbin
Code 567
November 4-5, 1998

HWCI 3.3.1.4
TDRSS RF Switch

- Risk Assessment & Mitigation/Reliability
  - 20+ Years Flight History on Sounding Rockets
  - COTS

Brian Corbin
Code 567
November 4-5, 1998

HWCI 3.3.1.5
TDRSS Diplexer

- Functional and Performance Requirements
  - 3.3.1.5 Motorola 4th Gen. Transponder
- HWCI Description
  - Physical
    - 5”L x 2”W x 3”H
  - Electrical
    - RF
      - VSWR 1.5:1 Max
      - Isolation 60dB Min.
      - Insertion Loss .6dB Max.
      - Receive 2000 -2100MHz
      - Transmit 2200-2300MHz

HWCI 3.3.1.5
TDRSS Diplexer

- Risk Assessment & Mitigation/Reliability
  - Fully Flight Qualified

Brian Corbin
Code 567
November 4-5, 1998