SUBORBITAL AND SPECIAL ORBITAL PROJECTS DIRECTORATE

Line of Sight Transmitter Interface Control Document for the ULDB/Tiger Mission

Effective date: October 2000

Original Signed by

Approved by: David W. Stuchlik
ULDB TIGER Balloncraft Manager
Code 820 Balloon Program Office

National Aeronautics and Space Administration

Goddard Space Flight Center
Wallops Flight Facility
Wallops Island, Virginia

Check the Code 820 Controlled Documents List to verify that this is the correct version prior to use

Line of Sight Transmitter ICD 0003

Prepared by:

Pat Bradley — Date
ULDB Telemetry PDT, AETD/Code 567.W

Submitted by:

Brian Corbin — Date
ULDB Telemetry PDL, AETD/Code 567.W

Concurrence:

Bob Ray — Date
ULDB Mechanical PDL, Carrier Systems Branch/Code 546

Scott Cannon — Date
ULDB Thermal PDL, Physical Science Labs (PSL)

Roger Mason — Date
ULDB Flight Software PDL, Real Time Software Engineering Branch/Code 584

Pam Pittman — Date
ULDB Control Center PDL, Advanced Architectures and Automation Branch/Code 588

Mike Smolinski — Date
ULDB Power PDL, Electrical Systems Branch/Code 565

Linda Thompson — Date
ULDB Command and Data Handling PDL, AETD/Code 565

CHANGE HISTORY LOG

Revision	Effective Date	Description of Changes
Baseline	05/2000	Initial release

Contents

1.0 Operations Description 1
2.0 Mechanical Specifications 1
2.1 Dimensions 1
2.2 Mass 1
2.3 Mounting – Hole Pattern 1
2.4 Connectors – Power, Data, and RF 1
2.5 Drawings 1
3.0 Electrical Interface 1
3.1 Connectors and Pin Assignments 1
4.0 Power and Thermal Interface 2
4.1 Operating Voltage 2
4.2 Power Consumption 2
4.3 Power Dissipation 2
4.4 Operating and Survival Temperature Range 2
4.5 Thermal Considerations 3
5.0 Transmitter Data and Command Interface 3
5.1 Data Interface 3
5.2 Command Interface 5
6.0 Flight Software Interface 5
7.0 Ground Software Interface 5
8.0 Document References 5
8.1 Data Sheets/Specification Sheets 5
8.2 User's Manuals, O&M Manuals, and Other Detailed Specifications 5

List of Tables

Table 3-1. J1 Pin Connections 2
Table 3-2. Frequency Select Connectors 2
Table 5-1. Transmitter Data Interface - Reference Housekeeping List 4
Table 5-2. Transmitter Command Interface-Ref. Command List, Rev. 1.0, 6/13/00 5

Appendix A. Model T-602 FM Transmitter Specifications
Appendix B. Transmitter Antenna
Appendix C. T-602/605 Technical Bulletin

Line of Sight Transmitter
Interface Control Document (ICD) 001.0
for the ULDB/TIGER Mission

1.0 Operations Description

The Line of Sight Transmitter System for the Ultra Long Duration Balloon (ULDB)/Trans-Iron Galactic Element Recorder (TIGER) Mission consists of two components: a L-3 Communications, Micron Division, Model 602HS 2-watt upper S-band FM Transmitter and a modified TDRSS Omni Midlatitude Antenna. The modification to the TDRSS Omni Midlatitude Antenna consists of adding a metal plate to the base of the antenna to secure the RF cable that will serve as its support when the antenna is hung from the bottom of the ballooncraft.

This ICD will be revised when the modification has been completed and tested. See Appendix A for a list of more transmitter specifications.

2.0 Mechanical Specifications

2.1 Dimensions

Antenna: 12" L x 5/8 OD tube (Reference Picture, Appendix B)
Transmitter: 3” L x 2” W x 1” H

2.2 Mass

Antenna: 3 oz.
Transmitter: 9 oz. max.

2.3 Mounting – Hole Pattern

Antenna: N/A
Transmitter: Reference T-602/605 Outline Drawing, Appendix C

2.4 Connectors – Power, Data, and RF

Antenna: Type N Female
Transmitter: Bendix PT1H-8-4P male, SMA Female
SMA Female, mDM-15S Female

2.5 Drawings

Antenna: See photograph, Appendix B
Transmitter: Reference T-602/605 Outline Drawing, Appendix C

3.0 Electrical Interface

3.1 Connectors and Pin Assignments

Antenna: One Type N Female; mating connector is a Type N Male
Transmitter: Reference Appendix B, pp1-4, L-3 Communications T-602/605 Technical Bulletin

Transmitter – Power Connector J1

Power Connector J1 is a male 4-Pin Bendix Type PT1H-8-4P. The mating connector for J1 is a Female Amphenol Type PT06E-8-4S. Pinouts are listed in Table 3-1 below.

Table 3-1. J1 Pin Connections

PIN	TELEMETRY	
A	+28 VDC IN	+28 VDC In
B	MOD IN	
C	+28 VDC RTN	+28 VDC RTN
D	MOD RTN	

Transmitter – RF Output Connector J2

Connector is a Female Single Pin Type SMA. The mating connector for J2 is a SMA male M/A COM Type 2031-5002-00.

Transmitter – Transmitter Frequency Select Connector J4

Connector is a Female 15-Pin Type MDM-15S. Frequency is selected by connecting a prewired programming plug into this connector. Table 3-2 is a list of the mating connectors and frequencies.

Table 3-2. Frequency Select Connectors

PLUG MODEL	FREQUENCY
T600FRPL-2378	2378.5 MHz
T600FRPL-2380	2380.5 MHz
T600FRPL-2382	2382.5 MHz
T600FRPL-2384	2384.5 MHz
T600FRPL-2386	2386.5 MHz
T600FRPL-2387	2387.5 MHz
T600FRPL-2388	2388.5 MHz

4.0 Power and Thermal Interface

4.1 Operating Voltage

Antenna None
Transmitter: +28 VDC, ±4 VDC

4.2 Power Consumption

Antenna None
Transmitter: 20 watts nom.

4.3 Power Dissipation

Antenna None
Transmitter: 16 watts

4.4 Operating and Survival Temperature Range

Antenna: Operating: -20C to +70C
Survival: -90C to +70C

Transmitter:	Operating:	-20C to +70C
	Survival:	-55C to +100C

4.5 Thermal Considerations

Antenna: None
Transmitter: Heat Sink Pad or Thermal Grease

5.0 Transmitter Data and Command Interface

5.1 Data Interface

Antenna: None
Transmitter: Data Interface – Reference Housekeeping List (Table 5-1)

Table 5-1. Transmitter Data Interface - Reference Housekeeping List

Num	Description	Sample Rate in Seconds LOS	Sample Rate in Seconds OTH (desired)	Fit CPU to LOS via RS-232	Fit CPU-LOS (Bits per Minute)	Fit CPU-OTH (Bits per Minute)	Direct to PCM (Samples per Second)	Fit CPU to TDRSS	Fit CPU to INMARSAT	Fit CPU to ARGOS ST-13	ARGOS Fit Crit Nav	Res Bits	Description & Comments
#VALUE!	LOS XMTTR #1/PCM Pwr ON/OFF Mon	3	6	X	20	10	1	X	X	X	D3	1	
#VALUE!	LOS XMTTR #2/PCM Pwr ON/OFF Mon	3	6	X	20	10	1	X	X	X	D4	1	
#VALUE!	LOS XMITR #1 Temp Mon	15	60	X	32	8		X	X	X		8	
#VALUE!	LOS XMITR #2 Temp Mon	15	60	X	32	8		X	X	X		8	
#VALUE	LOS XMITR #1/#2	3	6	X	20	10		X	X	X	D12	1	
#VALUE!	LOS Transmitter to CPU (1/2) Select	3	6	X	20	10		X	X	X		1	

5.2 Command Interface

Antenna: None

Transmitter: Command Interface – Reference Command List, Rev. 1.0, 6/13/00 (Table 5-2)

Table 5-2. Transmitter Command Interface - Reference Command List, Rev. 1.0, 6/13/00

Num	Description	Stack AART Address	Stack's Deck Cmd	BUCD AART Addr	CM DS	BUCD's Deck Cmd
#VALUE!	LOS XMTTR 1/PCM Encoder Pwr ON	CD	23h	E3		17h
#VALUE!	LOS XMTTR 1/PCM Encoder Pwr OFF	CD	24h	E3		21h
#VALUE!	LOS XMTTR 2/PCM Encoder Pwr ON	CD	25h	E3		22h
#VALUE!	LOS XMTTR 2/PCM Encoder Pwr OFF	CD	26h	E3		23h
#VALUE!	Switch LOS XMTTR 1 to PCM, XMTTR 2 to AUX	89	46h	E6		44h
#VALUE!	Switch LOS XMTTR 2 to PCM, XMTTR 1 to AUX	89	47h	E6		45h

6.0 Flight Software Interface

Flight Software: Housekeeping data will be packetized in CCSDS before input to RS-232 port on WFF-95 PCM encoder, which modulates the tranmitter.

7.0 Ground Software Interface

Ground Software: Downlink CCSDS data will be delivered to the ground station via a RS-232 on the PSL Decom.

8.0 Document References

8.1 Data Sheets/Specification Sheets

Antenna: Photograph, Appendix B

Transmitter: T-602/605 Technical Bulletin, dated 6/97

8.2 User's Manuals, O&M Manuals, and Other Detailed Specifications

Antenna: None

Transmitter: None

APPENDIX A
MODEL T-602 FM TRANSMITTER SPECIFICATIONS

OUTPUT CHARACTISTICS

Power Output:	2 watts
Turn-On Time:	Per IRIG-106
Frequency Range:	2310-2390 MHz
Frequeny Stability:	±0.002%
Output Impedance:	50 ohms
Output Load VSWR:	Isolator protected

POWER REQUIREMENTS

Voltage:	28 ±4 DC
Current (max):	1.0 Amp
Reverse Polarity:	No damage from Indefinite Application
Over Voltage:	40 VDC, 3 minutes

MODULATION CHARACTERISTICS

Type:	True FM
Sense:	Positive
Input Impedance:	10k ohms
Frequency Response:	10 Hz to 6 MHz +1.5db
Deviation Sensitivity:	User-adjustable, preset at ±500 kHz/Vrms ±10%
Maximum Deviation:	±8 MHz

ENVIRONMENTAL

Temperature:	
Non-Operating	-55 C to +100 C
Operating	-20 C to +70 C Baseplate
Vibration:	
Random	20-2000 Hz, 14g rms, 3 axes
Sine	20-2000 Hz, 20g peak, 3 axes
Shock:	100g, 11 msec, _sine, 3 axes
Acceleration:	100g, 3 axes
Altitude:	Unlimited
Humidity:	95% RH

APPENDIX B
TRANSMITTER ANTENNA

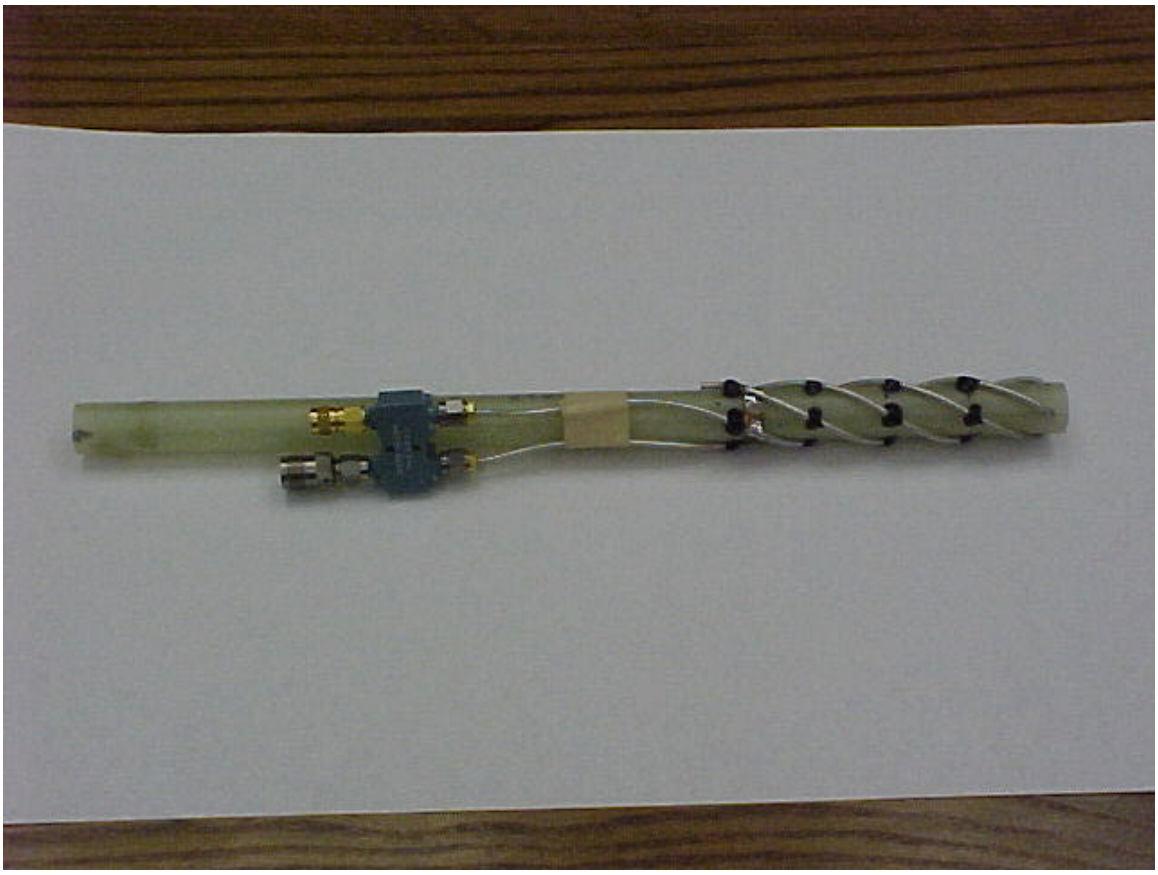

APPENDIX C
T-602/605 TECHNICAL BULLETIN

Technical Bulletin

T-602/605

L/S Band Frequency Agile FM Transmitters

TX / Amplifier Products

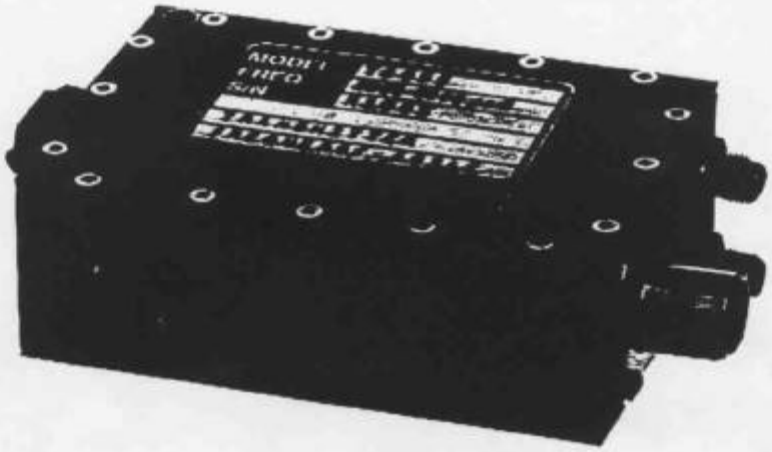

FEATURES:

- Video/Telemetry Applications
- 6 Cubic Inches
- 9 Ounces
- Frequency Agile
- 1/2 MHz Steps
- Meets IRIG Turn-on Time
- Optional CCIR-405 Pre-Emphasis
- L or S Band

L3 communications

The T-602/605 series are 6 cubic inch frequency agile transmitters designed for video and high data rate digital modulation requirements while operating in severe aerospace environments such as encountered in missiles, targets and RPV's.

Frequency is selectable in 0.5 MHz steps over an entire band by input of binary codes from a remote line or by connecting a prewired programming plug to the unit's MDM-15S frequency select connector J4. In addition, an optional dip switch, integral to the transmitter, can be used for frequency selection. (See Outline Drawings for access locations). An internal PROM translator option enables custom selection codes or BCD thumbwheel inputs without the need for any additional hardware.

A unique PLL control circuit permits 10 Hz modulation response while still meeting IRIG one second turn-on time requirements. Anti-sweep lock detect circuitry prevents RF radiation until the unit has locked on frequency, thereby eliminating the possibility of interference with other RF signals.

RF originates at full frequency rather than a subharmonic of the output frequency, thus eliminating low-order spurious signals. This scheme also minimizes parts counts and enhances the reliability of the transmitters.

The design accommodates the upgrading of all parts to fully hermetic high reliability requirements to meet almost any special program needs.

The T-600 transmitters are available in 2 and 5 watt versions operating in L or S band. Power can be extended to 20 watts by mounting the unit to a Microcom PA20 series power amplifier.

PIN CONNECTIONS		
J1	Telemetry (Optional)	or Video
A	+28 VDC In	+28 VDC In
B	MOD In	N.C.
C	+28 VDC RTN	+28 VDC RTN
D	MOD RTN	N.C.
	DELETE J3	

CHANNEL SELECT CONNECTOR				
J4	L-Band	S-Band	High S-Band	Step Size
P1	LSB	LSB	LSB	0.5 MHz
P2	--	--	--	1.0 MHz
P3	--	--	--	2.0 MHz
P4	--	--	--	4.0 MHz
P5	--	--	--	8.0 MHz
P6	--	--	--	16.0 MHz
P7	--	--	--	32.0 MHz
P8	MSB	MSB	--	64.0 MHz
P9	N.C	N.C	MSB	128.0 MHz
P10-14	N.C	N.C	N.C	--
P15	GND	GND	GND	--

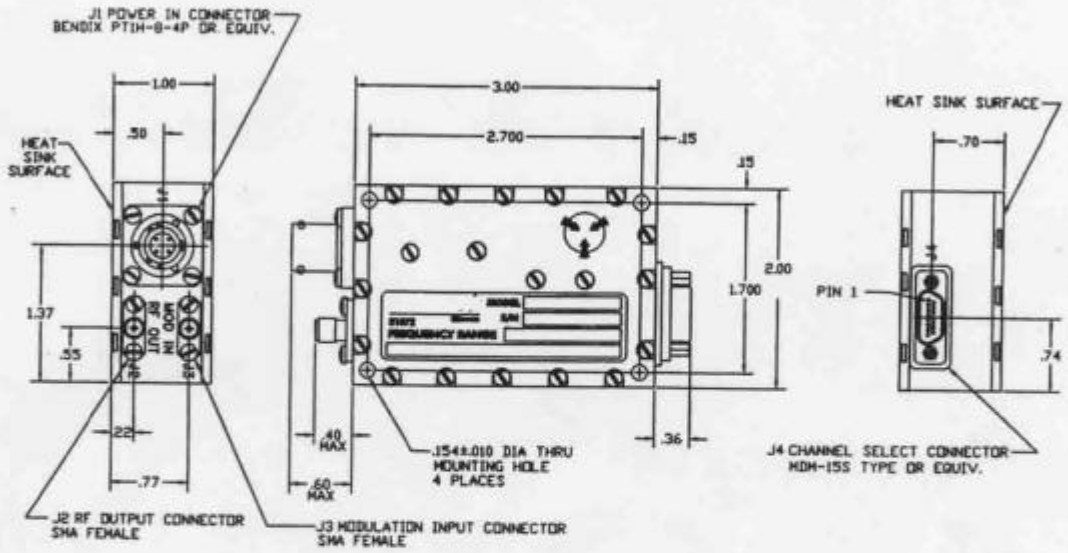

(For units with the optional dip switch, J4 is replaced with the switch and associated protective cover.)

T-602/605 Outline Drawing

SPECIFICATIONS

Output Characteristics

Power Output (min.):	T-602, 2 watts; T-605, 5 watts
Turn-on Time:	Per IRIG-106
Frequency Range:	1435.5 - 1535.5 MHz. 2200-2300 MHz, 2310-2390 MHz
Frequency Selection:	Frequency Agile, 1/2 MHz Steps Thru Operating Band
Frequency Stability:	±0.002%
Output Impedance:	50 ohm nominal
Output Load VSWR:	Isolator Protected

Power Requirements

Voltage:	28 ±4 VDC
Current (max.):	T-602, 1.0 Amp; T-605, 1.6 Amp
Reverse Polarity:	No damage from Indefinite Application
Over Voltage:	40 VDC, 3 minutes
Grounding:	Power and Modulation Returns Common to Case

Modulation Characteristics

Type:	True FM
Sense:	Positive
Input Impedance:	Video = 75 ohm. Telemetry = 10k ohm
Frequency Response:	10 Hz to 6 MHz +1.5 dB (See Options)
Deviation Sensitivity:	User Adjustable, Preset at ± 4 MHz/vp-p ±10% for Video and ±500 kHz/Vrms ±10% for Telemetry
Maximum Deviation:	±8 MHz
Linearity:	2% BSL at 5 MHz deviation
IFM:	10 kHz peak
IAM:	5% max.
Modulation Distortion:	2% max. at 5 MHz deviation

Environmental

Temperature	
Non-Operating:	–55°C to +100°C –
Operating:	–20°C to +70°C Baseplate – (See Options)
Vibration	
Random:	20-2000 Hz, 14g rms, 3 axes
Sine:	20-2000 Hz, 20g peak, 3 axes
Shock:	100g, 11 msec, 1/2 sine, 3 axes
Acceleration:	100g, 3 axes
Altitude:	Unlimited
Humidity:	95% RH
EMI:	MIL-STD 461 at 28 VDC, IRIG-106 for Antenna Conducted

Mechanical

Dimensions:	See Outline Drawing
Volume:	6 cubic inches
Weight:	9 oz .max.
Connectors:	See Outline Drawing
Pin Connections:	See Outline Drawing

Options

Extended Operating Temperature:	–40°C to +85°C
Video Pre-Emphasis:	CCIR-405
Higher Efficiency:	Consult Factory
Extended Frequency Response:	12 MHz max.
Other Modulation Sensitivity:	Consult Factory
Modulation Return Isolation:	Consult Factory

Frequency Select Customer Specify):

- Internal PROM Translator for BCD Thumbwheel or Custom Codes
- Prewired Mating Connectors,
- Dip Switch

Modulation Input Connector:	SSMA or Modulation input on J1& deletion of J3

Specify When Ordering:

Model Number:

T-602L, 2 watt, L-Band = 1435.5 - 1535.5 MHz
T-602S, 2 watt, S-Band =2200 - 2300 MHz
T-602HS, 2 watt, S-Band = 2310 - 2390 MHz
T-605L, 5 watt, L-Band = 1435.5 - 1535.5 MHz
T-605S, 5 watt, S-Band = 2200 - 2300 MHz
T-605HS, 5 watt, S-Band = 2310 - 2390 MHz

Frequency Band:	1435.5 - 1535.5 MHz, 2200-2300 MHz or 2310-2390 MHz
Frequency Selection:	See Options
Modulation Input Impedance:	75 ohm or 10k ohm
Modulation Sensitivity:	Per Customer

L3 communications

L-3 Communications Microcom Division
965 Thomas Dr. • Warminster, PA 18974
Telephone: (215) 672-6300
Fax: (215) 672-7437

Printed in USA 6/97

Specifications subject to change without notice