AD2－EOSD－97－013

RECORDING SUBSYSTEM RAW DATA FORMAT SPECIFICATION

(Rev.1.0)

NASDA

RAW data format specification

1.General

Raw data of ADEOS and ADEOS-Ⅱ is recorded by DIR-1000M and DFC-1800N.

Base format is ID-1 format, and logical format is defined by this document.

ID-1 format is defined by ANSI X3.175-1990, and the detailed information is described as follows,

ANSI X3.175-1990
19mm Type ID-1 Recorded
Instrumentation Digital Cassette Tape Format

Raw data must be recorded in accordance with ID-1 format and format specification described in this document.

This document is based on "ADEOS RECORDING SUBSYSTEM RAW DATA FORMAT SPECIFICATION -Rev2.0(ADEOS-N-R344)", and revised for ADEOS-Ⅱ raw data format specification.

This document is applied to the ADEOS/ADEOS-Ⅱ raw data format specification and would be applied to other satellite raw data format specification if the raw data tape is sent to NASDA EOC.

So, the media management number in the tape sent to NASDA EOC should be uniquely assigned in all cases.

2. Tape format

See Figure 1.

3.Tape

(1) Media type : D1M cassette
(equivalent to SD1-600M;SONY)
(2) Real size : 587m
(3) Recording format : ANSI X3.175-1990
ID-1 format
(4) Capacity : 42.23GBytes

4. Recording data

(1) Mission data

	downlink data	mode	data raw	satellite
a)	Packetized data	MDR	60Mbps	ADEOS-Ⅱ
b)	GLI-250m	REAL/ODR	60Mbps	〃
c)	Packetized data	REAL	6Mbps	〃
d)	AVNIR(Mu)	REAL/MDR	60Mbps	ADEOS
e)	AVNIR(Pa)	REAL/MDR	60Mbps	〃
f)	6M MUX	REAL	6Mbps	〃
g)	6M MUX	MDR	60Mbps	〃
h)	3M MUX	MDR	60Mbps	〃
i)	OCTS	MDR	60Mbps	〃

(note) Recording mission data from QPSK demodulator must be multiplexed.
See Figure 2.

(2) Time code

IRIG-A AC code.

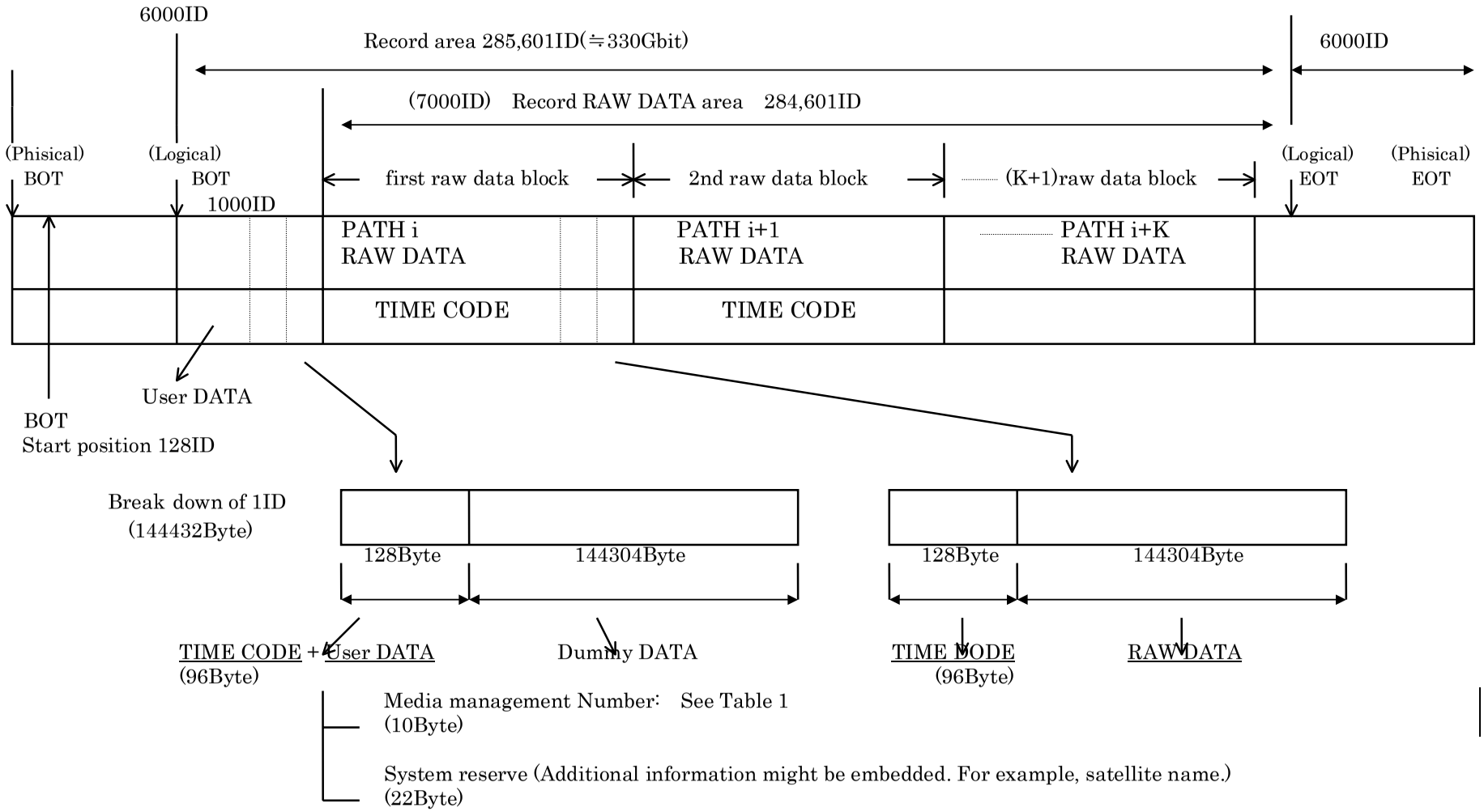

note 1 : Media management number is recorded at all IDs form 6000ID to 6200ID.
note 2 : Media management number in the tape sent to NASDA EOC should be uniquely assigned in call cases.

Figure 1 RAW DATA Format (RAW DATA)

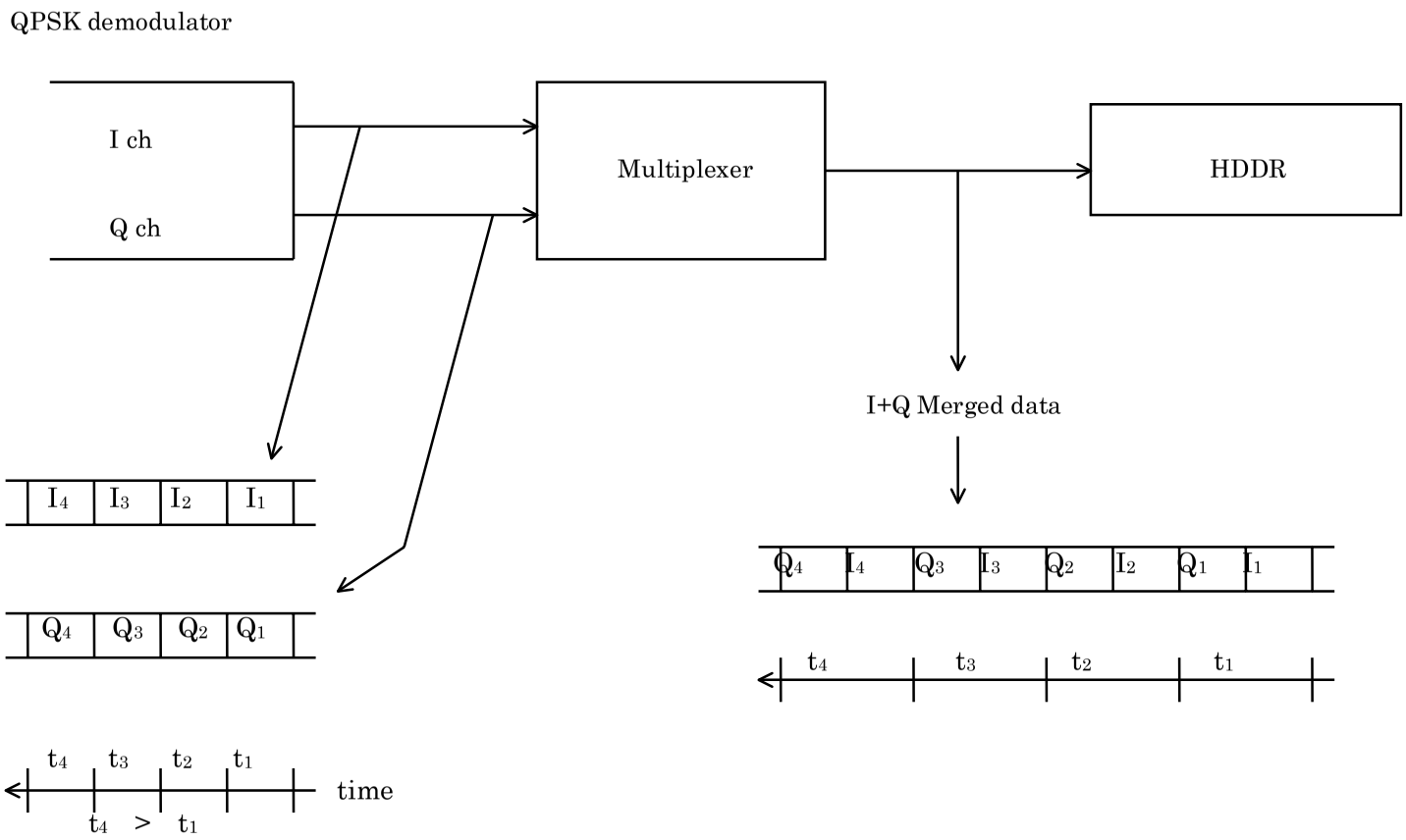

Figure 2　I・Q multiplexing method

Table 1 Media Management Number

No	Station	Media Management Number
1	ASF	D65Nnnnnnn nnnnnn=000000～999999 N=0:ADEOS N=1:ADEOS backup N=2:ADEOS-2 N=3:ADEOS-2 backup N=4:spare N=5:JERS-1(MDR) N=6:JERS-1(Real)
2	WFF	D66Nnnnnnn nnnnnn=000000～999999 N=0:ADEOS N=1:ADEOS backup N=2:ADEOS-2 N=3:ADEOS-2 backup N=4:spare
3	KRNS	D70Nnnnnnn nnnnnn=000000～999999 N=0:ADEOS N=1:ADEOS backup N=2:ADEOS-2 N=3:ADEOS-2 backup N=4:spare